ACHILLES LOGOS
ACHILLES WAVE LOGO – **C492**
ACHILLES "A" LOGO – **C493**

SEAT PARTS
SEAT – **WST88LG**
SEAT CHANNEL PATCH – **DC412LG**
SEAT PLASTIC CHANNELS – **EA003**

TOWING D-RINGS
35MM - **C414GY**

LIFELINE D-RINGS & ROPE
WEBBED D-RING – **C480L & C480L**
LIFELINE - **PEROPE**

RUBSTRAKE
GRAY / WHITE - **VA083WH**

AIR VALVE PARTS
COMPLETE – **C342GY**
VALVE CAP – **C349GY**
CAP DIAPHRAM – **C348**
VALVE FLAPPER – **C3421**
VALVE STRAP – **C343N**
O-RING – **C344**
VALVE BASE – **C333**
BASE RING – **C345GY**

OARS & OARLOCK PARTS
OARS – **DC635**
OARLOCK – **DC4126GY**
SCREW CAPS – **DC393**
PIN & RIVET SET – **COM165**
OAR HOLDER – **DC4123GY**

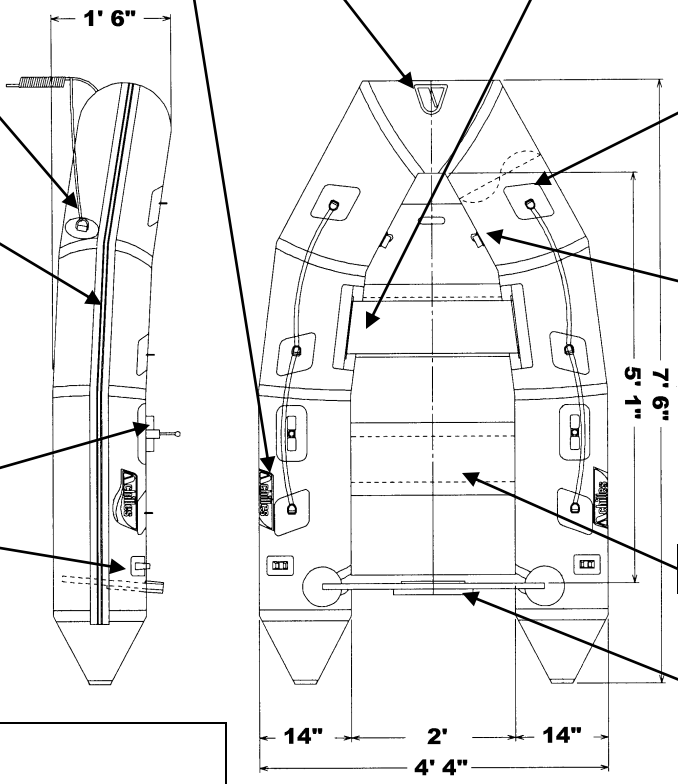

FLOOR BOARD – **LS2RUWFB 2007-**

TRANSOM PARTS
INSIDE TRANSOM PLATE – **SC620**
OUTSIDE TRANSOM PLATE – **TBD**

OTHER PARTS
REPAIR KIT – **C210LG**
FOOT PUMP BRAVO 1 – **C512**
CARRY BAG – **SJ824**
(OPTIONAL)
UNDER SEAT STOWAGE BAG W/POCKETS – **USSTBAG**
PRESSURE GUAGE – **E132**

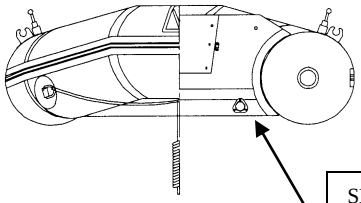

SELF BAILER PARTS
BAILER VALVE (INCUDES FLAPPER) – **C441A**
BAILER PLUG – **C441B**
BAILER FLAPPER – **C441C**

LS2RU

2023

LINE DRAWING & PARTS LIST